REVISIONS			
REV.	DESCRIPTIONS	EDIT BY	DATE:(d/m/y)
01	CUSTOMIZE NEW	FL LUEI	02/09/2020
-	-	-	DD/MM/YYYY

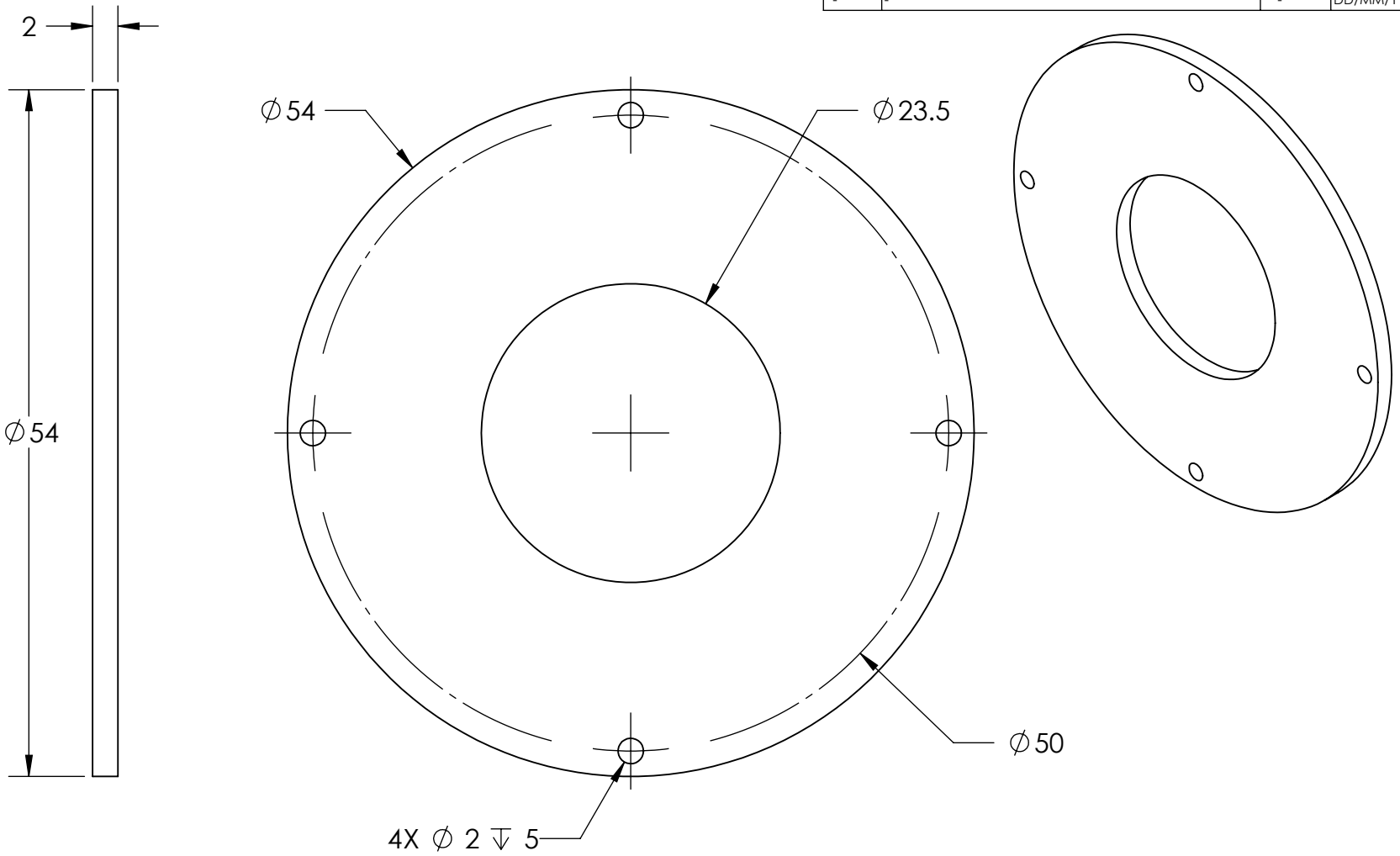

CUSTOMER APPROVED & DATE

OPTO ENGINEERING

DESIGN BY	FL LUEI	UNIT: MM	PRODUCT SERIES: LSW SERIES - OPTO ENG.
CHECK BY	KB TAN	REVISION: 01	TITLE: DRAWING LAYOUT
DATE	2/9/2020	SCALE: 1 : 1	PART NO: DFLTZGK050-00-2
MATERIAL	TW433C 2.0MM		DWG NO: -
FINISHING	-		SHEET 1 OF 1
QTY	1		